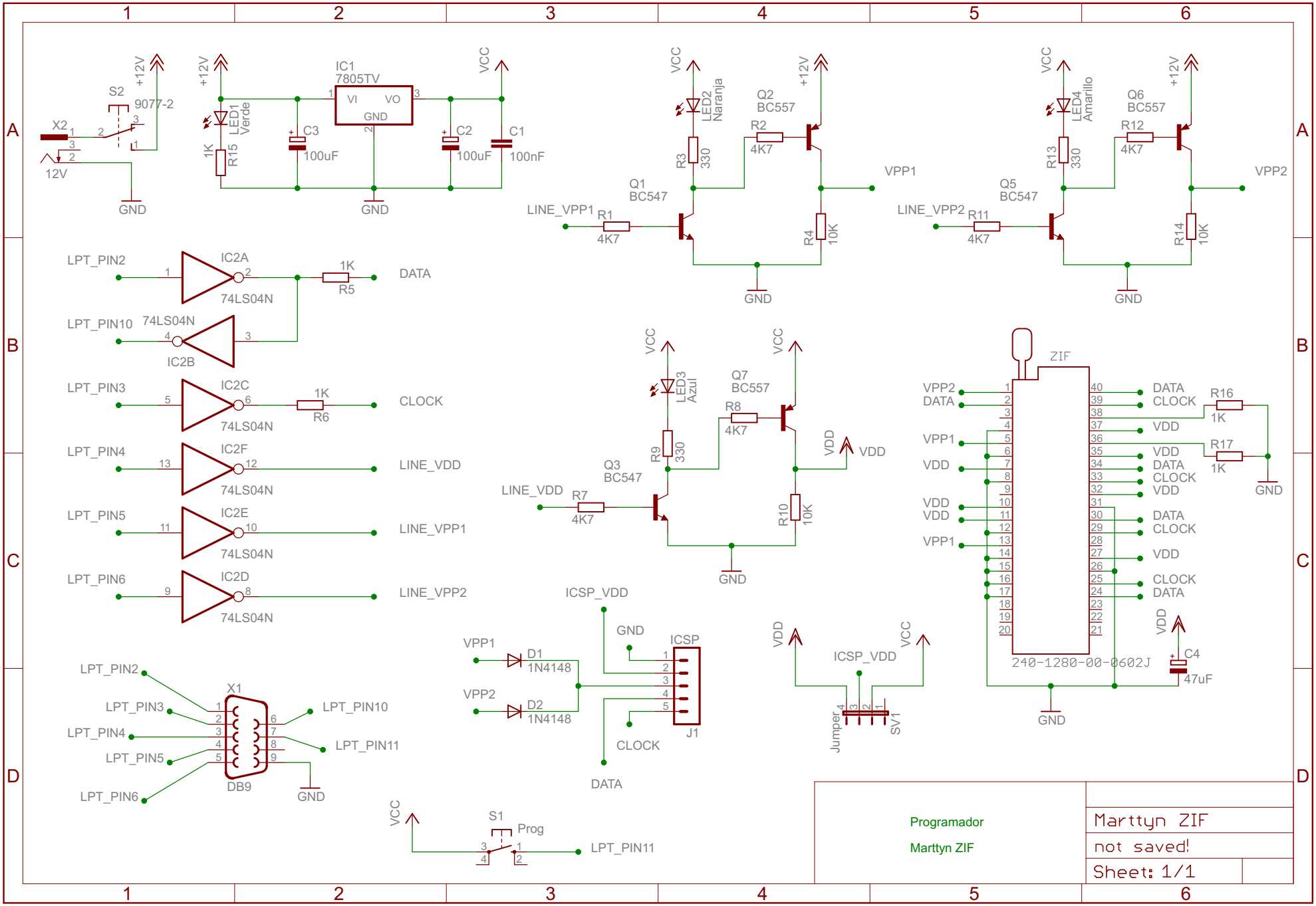
X2
12V
S2
9077-2
+12V
GND
LED1
Verde
R15
1K
C3
100uF
IC1
7805TV
VI
VO
GND
C2
100uF
C1
100nF
VCC
LED2
Naranja
R3
330
Q2
BC557
R2
4K7
Q1
BC547
R1
4K7
LINE_VPP1
R4
10K
VPP1
LED4
Amarillo
R13
330
Q6
BC557
R12
4K7
Q5
BC547
R11
4K7
LINE_VPP2
R14
10K
VPP2
LPT_PIN2
IC2A
74LS04N
1K
R5
DATA
LPT_PIN10
IC2B
LPT_PIN3
IC2C
R6
CLOCK
LPT_PIN4
IC2F
LINE_VDD
LPT_PIN5
IC2E
LINE_VPP1
LPT_PIN6
IC2D
LINE_VPP2
LED3
Azul
R9
330
Q3
BC547
R7
4K7
Q7
BC557
R8
4K7
VDD
R10
10K
ZIF
240-1280-00-0602J
R16
1K
R17
1K
C4
47uF
X1
DB9
LPT_PIN11
ICSP_VDD
ICSP
J1
D1
1N4148
D2
1N4148
CLOCK
DATA
Jumper
SV1
S1
Prog
Programador
Marttyn ZIF
Marttyn ZIF
not saved!
Sheet: 1/1